Name:_____

Exam Question Booklets
OCR Physics A

Booklet 8
12 Questions
104 marks

Things to remember:

✓

✓

✓

✓

✓

✓

✓

1

In this question, two marks are available for the quality of written communication.

Fig. 5.1 shows stress - strain graphs up to the point of fracture for three different materials.

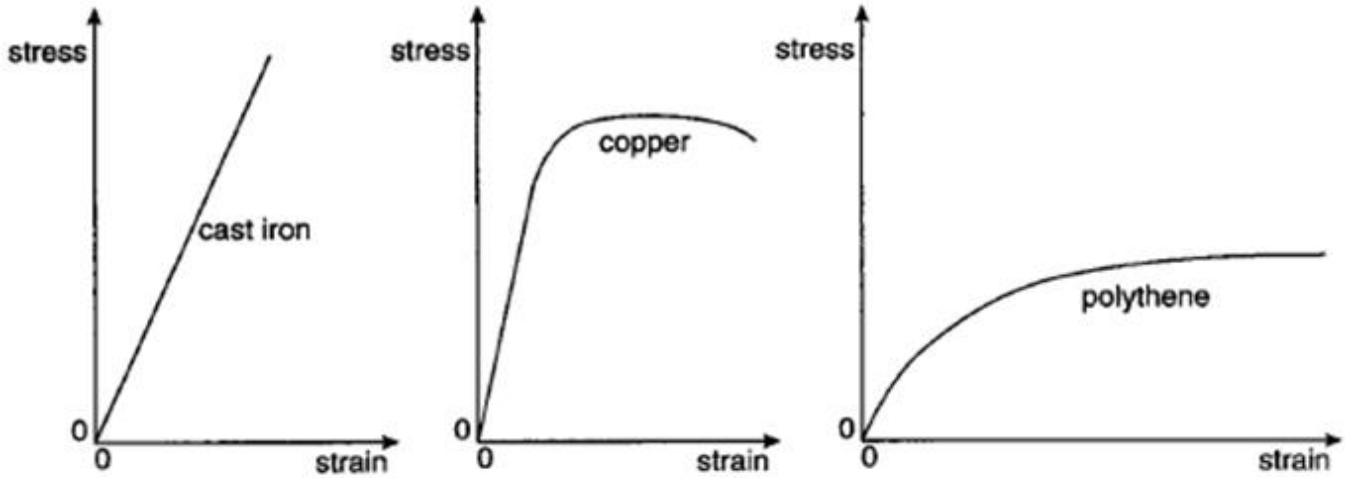

Fig. 5.1

Use the terms *plastic*, *elastic*, *brittle*, and *ductile*, where appropriate, to describe the behaviour of the materials represented by the graphs.

cast iron .....

.....

.....

.....

.....

.....

.....

.....

.....

.....

copper .....

.....

.....

.....

.....

.....

.....

.....

.....

.....

polythene .....

.....

.....

.....

.....

.....

.....

.....

.....

..... [8]

(a) Define

(i) strain

.....

.....[1]

(ii) stress

.....

.....[1]

(b) State the SI unit used for the Young modulus.

.....[1]

(c) In this question, two marks are available for the quality of written communication.

Fig. 5.1 shows apparatus that is used to determine the Young modulus of the metal from which a wire is made.

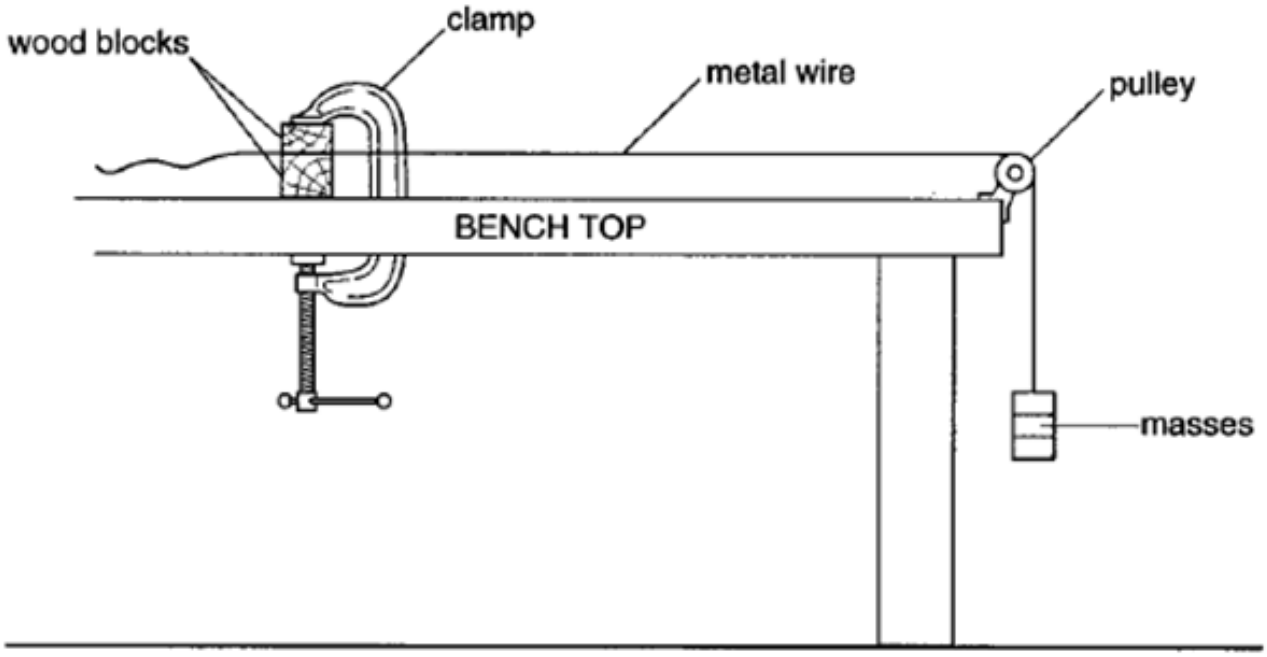

Fig. 5.1

Describe in detail how the apparatus shown in Fig. 5.1, and any additional apparatus, could be used to determine the Young modulus of the metal.

State the measurements to be taken and describe how they would be obtained.

.....

.....

.....

.....

.....

.....

Describe how you would determine the Young modulus from the measurements taken.

.....

.....

.....

.....

.....

.....

.....

.....

.....

.....

.....

.....

.....[10]

(a) Define the *Young modulus*.

.....

..... [1]

(b) The wire used in a piano string is made from steel. The original length of wire used was 0.75 m. Fixing one end and applying a force to the other stretches the wire. The extension produced is 4.2 mm.

(i) Calculate the strain produced in the wire.

strain = ... [2]

(ii) The Young modulus of the steel is 2.0×10^{11} Pa and the cross-sectional area of the wire is 4.5×10^{-7} m^2. Calculate the force required to produce the strain in the wire calculated in **(i)**.

force = ... N [3]

(c) A different material is used for one of the other strings in the piano. It has the same length, cross-sectional area and force applied. Calculate the extension produced in this wire if the Young modulus of this material is half that of steel.

extension = ... mm [2]

(d) **(i)** Define *density*.

.....

..... [1]

(ii) State and explain what happens to the density of the material of a wire when it is stretched. Assume that when the wire stretches the cross-sectional area remains constant.

.....

.....

..... [1]

4 This question is about the operation of an electrically operated shower.

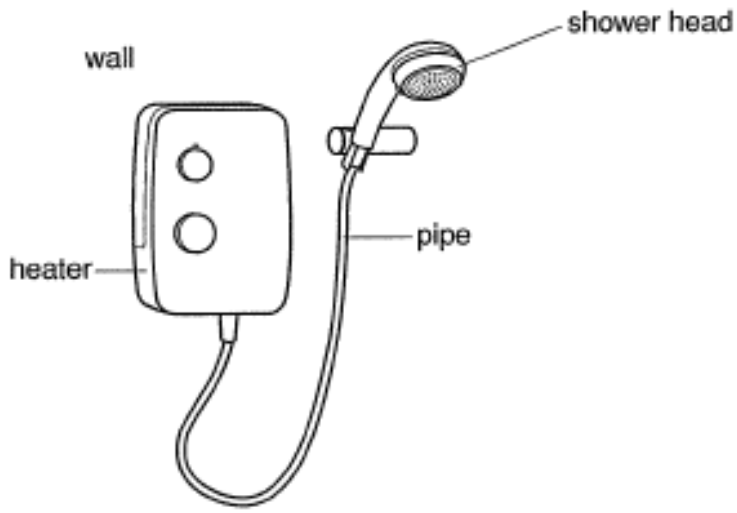

Fig. 2.1

(a) The water moves at constant speed through a pipe of cross-section $7.5 \times 10^{-5}\,m^2$ to a shower head. See Fig. 2.1. The maximum mass of water which flows per second is $0.090\,kg\,s^{-1}$.

(i) Show that the maximum speed of the water in the pipe is $1.2\,m\,s^{-1}$.

density of water = $1000\,kg\,m^{-3}$

[2]

(ii) The total cross-sectional area of the holes in the head is half that of the pipe. Calculate the maximum speed of the water as it leaves the shower head.

speed = ... $m\,s^{-1}$ [1]

(iii) Calculate the magnitude of the force on the shower head.

force = ... N [3]

(iv) Draw on Fig. 2.1 the direction of the force in **(iii)**. [1]

5 This question is about kicking a football.

(a) Fig. 1.1 shows how the force *F* applied to a ball varies with time *t* whilst it is being kicked horizontally. The ball is initially at rest.

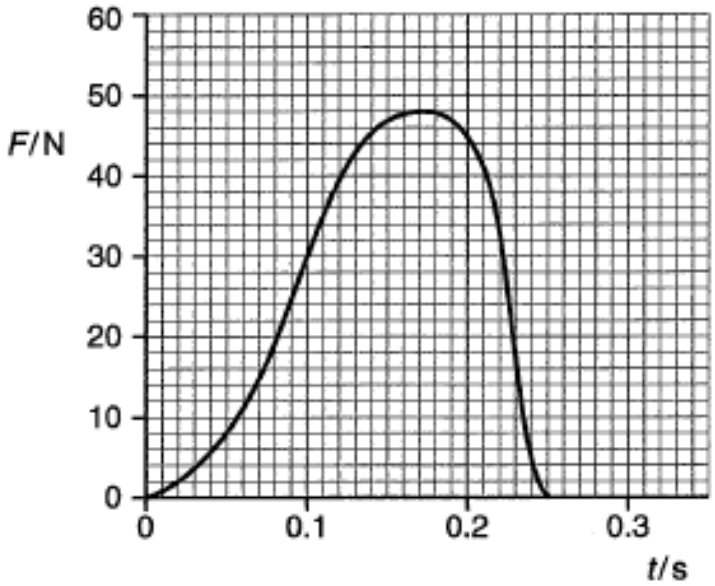

Fig. 1.1

(i) Use the graph to find

1 the maximum force applied to the ball

maximum force = ...N

2 the time the boot is in contact with the ball.

time = ...s [1]

(ii) The mean force multiplied by the time of contact is called the impulse delivered to the ball. Use the graph to estimate the impulse delivered to the ball.

impulse = ...N s [2]

(b) The mass of the ball is 0.50 kg. Use your answers to **(a)** to calculate

(i) the maximum acceleration of the ball

acceleration = ...m s^{-2} [2]

(ii) the final speed of the ball

speed = ...m s^{-1} [2]

(iii) the kinetic energy of the ball after the kick.

kinetic energy = ...J [2]

(c) The ball hits a wall with a speed of 14 m s^{-1}. It rebounds from the wall along its initial path with a speed of 8.0 m s^{-1}. The impact lasts for 0.18 s. Calculate the mean force exerted by the ball on the wall.

force = ...N [3]

One end of a spring is fixed to a support. A mass is attached to the other end of the spring. The arrangement is shown in Fig. 3.1.

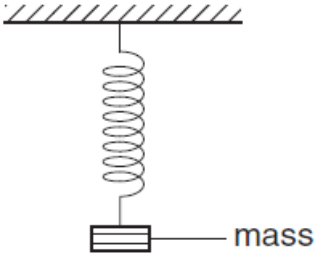

Fig. 3.1

(a) The mass is in equilibrium. Explain, by reference to the forces acting on the mass, what is meant by equilibrium.

.....

.....

..... [2]

(b) The mass is pulled down and then released at time $t = 0$. The mass oscillates up and down. The variation with t of the displacement of the mass d is shown in Fig. 3.2.

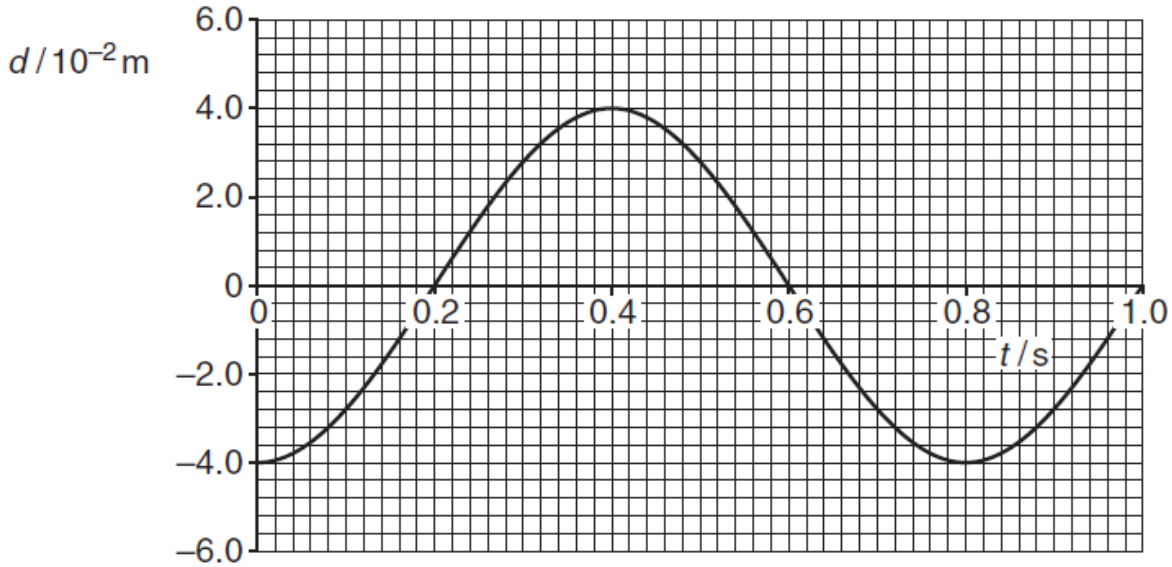

Fig. 3.2

Use Fig. 3.2 to state a time, one in each case, when

(i) the mass is at maximum speed,

time = ... s [1]

(ii) the elastic potential energy stored in the spring is a maximum,

time = ... s [1]

(iii) the mass is in equilibrium.

time = ... s [1]

(c) The arrangement shown in Fig. 3.3 is used to determine the length l of a spring when different masses M are attached to the spring.

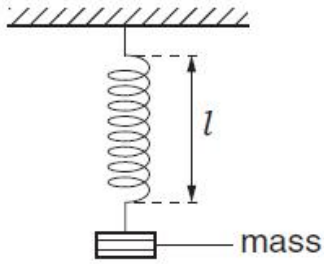

Fig. 3.3

The variation with mass M of l is shown in Fig. 3.4.

(i) State and explain whether the spring obeys Hooke's law.

.....

.....

..... [2]

(ii) Show that the force constant of the spring is $26\,\mathrm{N\,m^{-1}}$.

[2]

(iii) A mass of 0.40 kg is attached to the spring. Calculate the energy stored in the spring.

energy = ... J [3]

The variation with mass M of l is shown in Fig. 3.4.

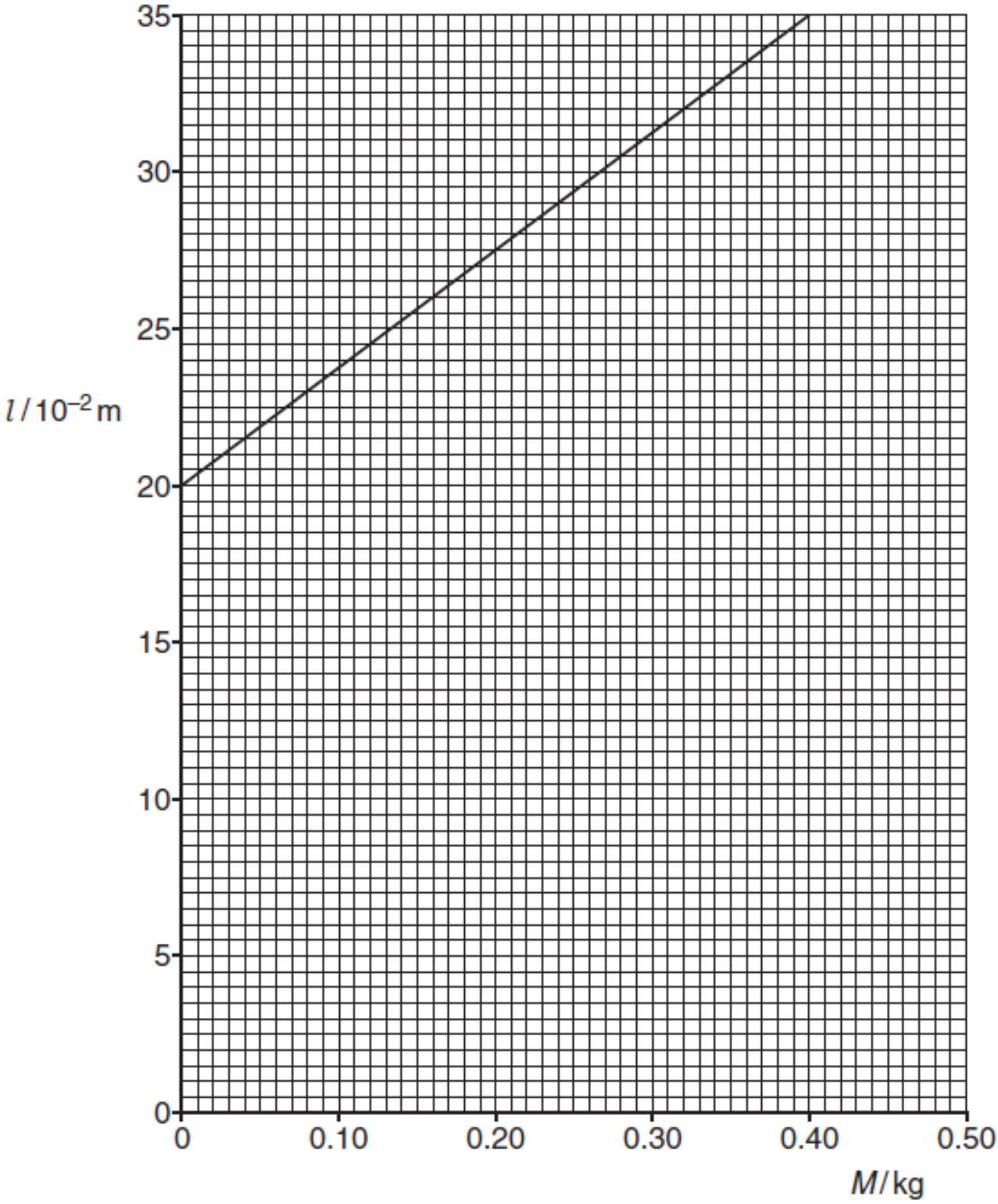

Fig. 3.4

7

The walls of the tyres on a car are made of a rubber compound.
The variation with stress of the strain of a specimen of this rubber compound is shown in Fig. 5.2.

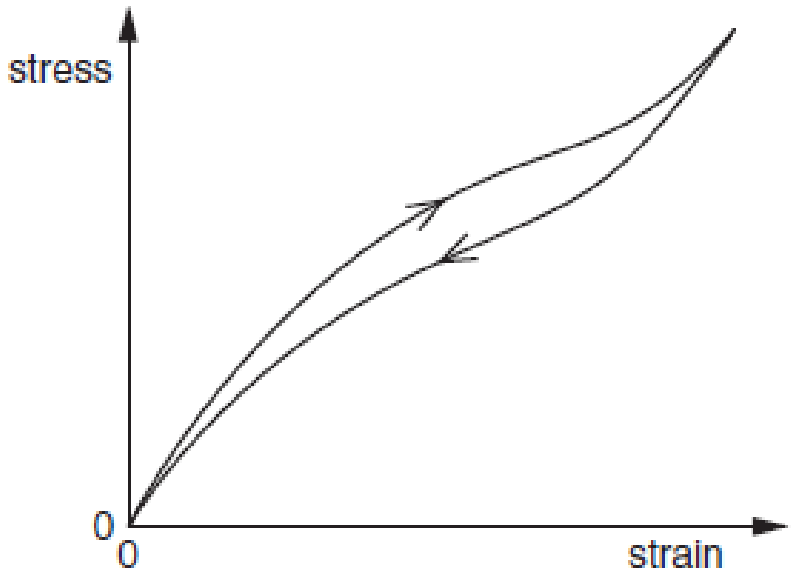

Fig. 5.2

As the car moves, the walls of the tyres bend and straighten continuously.

Use Fig. 5.2 to explain why the walls of the tyres become warm.

.....

.....

.....

..... [3]

Fig. 3.1 shows part of a fairground ride with a carriage on rails.

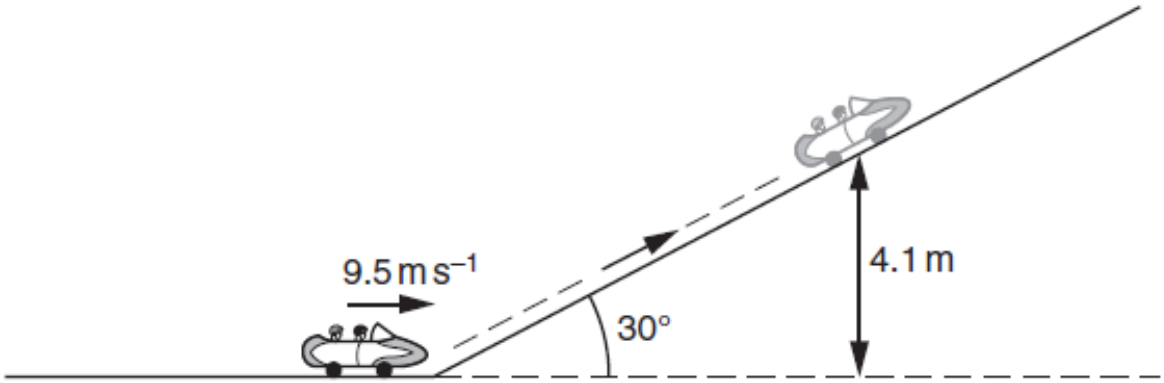

Fig. 3.1

The carriage and passengers have a total mass of 600 kg. The carriage is travelling at a speed of 9.5 m s^{-1} towards a slope inclined at 30° to the horizontal. The carriage comes to rest after travelling up the slope to a vertical height of 4.1 m.

(i) Calculate the kinetic energy, in kJ, of the carriage and passengers as they travel towards the slope.

kinetic energy = ... kJ [3]

(ii) Show that the gain in potential energy of the carriage and passengers is 24 kJ.

[2]

(iii) Calculate the work done against the resistive force as the carriage moves up the slope.

work done = ... kJ [1]

(iv) Use your answer in **(iii)** to calculate the resistive force acting against the carriage as it moves up the slope.

resistive force = ... N [2]

9 **(a)** All waves are either longitudinal or transverse. State **one** example of each.

longitudinal .....

transverse .....[2]

(b) Define

(i) the frequency of a wave

.....[1]

(ii) the period of a wave.

.....[1]

(c) Fig. 2.1 shows the variation of displacement with position at a particular instant for a progressive sound wave travelling in air.

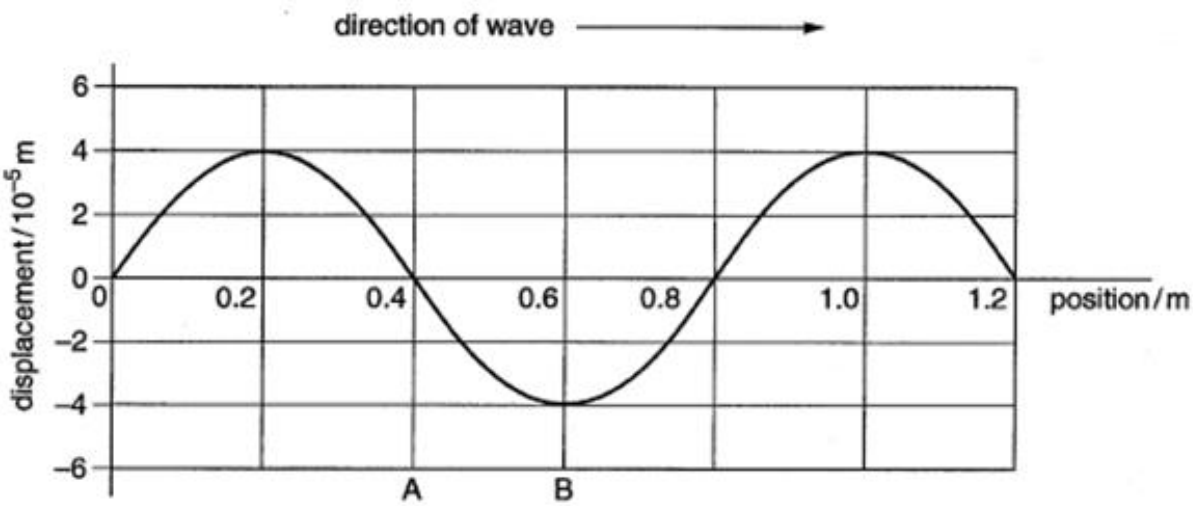

Fig. 2.1

(i) State the amplitude of the sound wave shown in Fig. 2.1

amplitude = ... m [1]

(ii) Describe the motion of an air particle at position A as one full cycle of the wave passes.

.....

.....

.....

.....

.....[3]

(iii) State **one** way in which the motion of an air particle at position B is similar to, and **one** way in which it is different from, the motion of an air particle at A as the wave passes.

similarity .....

.....

difference .....

.....[2]

(iv) Use Fig. 2.1 to determine the wavelength of the sound wave.

wavelength = ... m [1]

(v) The speed of the sound wave is 340 m s^{-1}. Calculate the frequency of the sound.

frequency = ... Hz [3]

10 Fig. 3.1 shows part of a student's revision notes about 'Waves'. The notes contain several errors of physics.

WAVES
1. Longitudinal waves are caused by vibrations perpendicular to the direction of the waves.
2. No waves can travel through a vacuum, there must be a medium to carry them.
3. Waves carry the medium from one place to another.
4. Speed v is the distance travelled by the wave per unit time.
5. Frequency f is the number of waves produced in unit time.
6. Wavelength λ is the distance from a crest to a trough.

Fig. 3.1

Identify 4 incorrect statements of physics and state how each could be corrected.

.....

.....

.....

.....

.....

.....

.....

.....

.....

.....

.....

.....

.....

.....

.....

.....

.....

.....

.....

.....

.....[8]

(a) Explain what is meant by *electric current*.

..... [1]

(b) The SI unit of electric charge is the coulomb. Define the *coulomb*.

.....

..... [1]

(c) Fig. 1.1 shows two strips of aluminium foil connected to a d.c. supply.

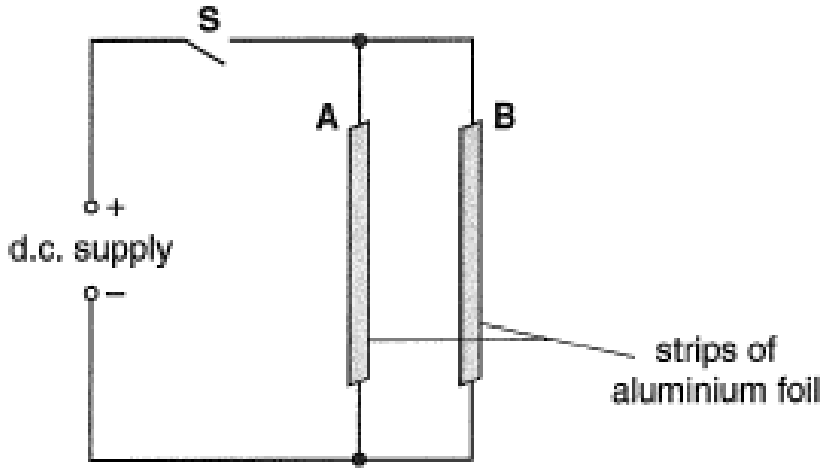

Fig. 1.1

The switch **S** is closed.

(i) The charge flow past a particular point in one of the aluminium strips is 340 C in a time of 50 s. Calculate the current in this aluminium strip.

current = ... A [2]

Fig. 2.1 shows an electrical circuit.

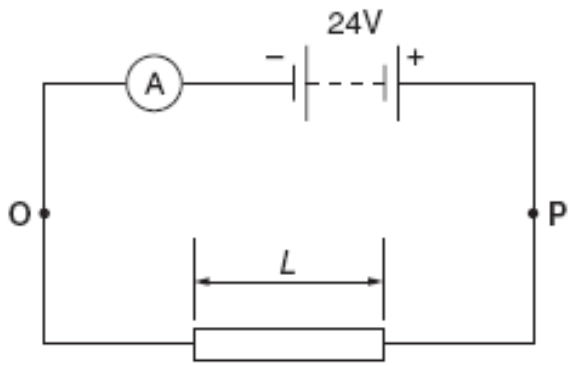

Fig. 2.1

The d.c. supply has e.m.f. of 24 V and has negligible internal resistance.

(a) The ammeter in the circuit measures the current in amperes (A). From the list below, circle a unit that is equivalent to the ampere.

JC^{-1} Cs^{-1} Js^{-1} VsC^{-1} **[1]**

(b) On Fig. 2.1 draw arrows to show the direction of the conventional current at points **O** and **P**. **[1]**

(c) The number of electrons passing through point **P** in a time of 30 s is 9.4×10^{20}. The charge on an electron is 1.6×10^{-19} C. Show that the current at **P** is 5.0 A.

[3]